01D

717570312

Owner's Manual & Assembly Guide

ARROW Storage Products

Model No. NB63-A☐ NG63-A☐

6' x 3'
Nominal Size

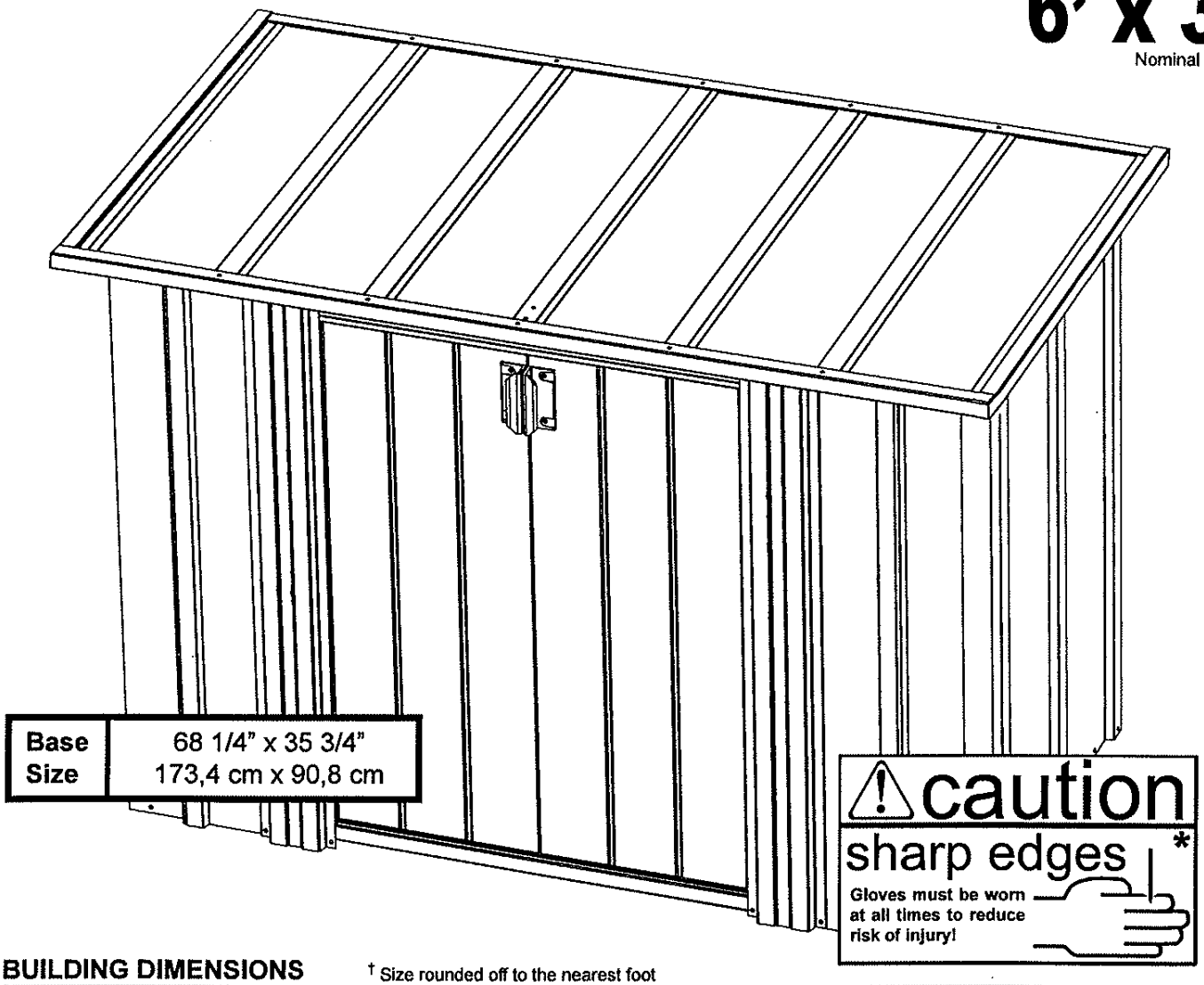

Base Size	68 1/4" x 35 3/4" 173,4 cm x 90,8 cm

BUILDING DIMENSIONS

† Size rounded off to the nearest foot

Approx.† Size	Storage Area		Exterior Dimensions (Lid Edge to Lid Edge) Width	Depth	Height	Interior Dimensions (Wall to Wall) Width	Depth	Height	Door Opening Width	Height
6' x 3'	15 Sq. Ft.	44 Cu. Ft.	67"	36 1/4"	36 1/4"	65 1/2"	33"	35"	31 7/8	32 3/8"
1,7 m x 0,8 m	1,4 m^2	1,2 m^3	170,2 cm	92,1 cm	92,1 cm	166,4 cm	83,8 cm	88,9 cm	81,0 cm	82,2 cm

*** See Inside for Detailed Safety Information.**

MADE IN USA

BEFORE YOU BEGIN...

Safety precautions MUST be followed at all times throughout the construction of your Storage Unit!

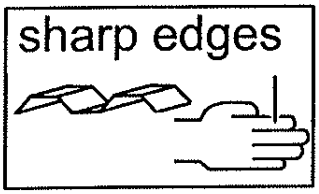

•Care must be taken when handling various pieces of your Storage Unit since many contain sharp edges. Please wear work gloves, eye protection and long sleeves when assembling or performing any maintenance on your Storage Unit.

•Practice caution with the tools being used in the assembly of your Storage Unit. Be especially familiar with the operation of all power tools.

•Keep children and pets away from the worksite during construction. Do not allow children to help with assembly.

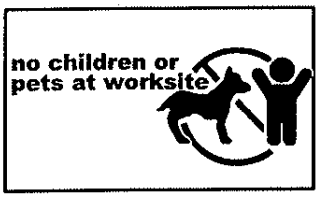

•Do NOT attempt to assemble your Storage Unit on a windy day. The large panels can catch the wind like a "sail", causing them to be whipped around making construction difficult and unsafe.

•If possible, two people should work together to assemble your Storage Unit. This will make assembly faster and easier.

•Your Storage Unit needs to be anchored after assembly. The Storage Unit may be anchored to a deck or concrete patio using deck screws or concrete anchors. You may also anchor it to any flat, level surface. Alternatively, patio blocks may be used to anchor the Storage Unit. See back page for more info.

Reading and following all steps carefully will help make assembly quicker and easier. Before you begin assembly, be sure to confirm that all the parts for your building are present using the checklist on pages 3 and 4. If parts are missing, include the model number of your building and contact the retailer where you purchased your Storage Unit.

Below is a list of things you will need to assemble your Storage Unit.

WHAT YOU NEED

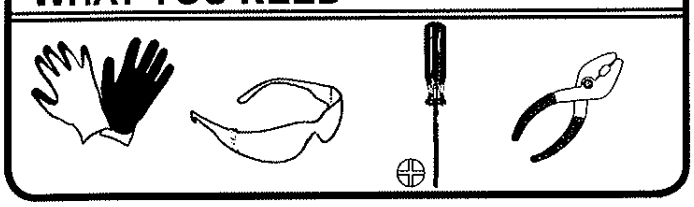

- **Work Gloves**
- **Safety Glasses**
- **No. 2 Phillips Screwdriver (Magnetic Tip Preferred)**
- **Pliers**

RECOMMENDED TIME SAVERS

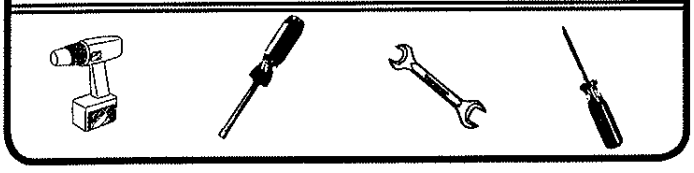

- **Power Drill (Cordless, Variable Speed)**
- **Nut Driver or Wrench**
- **Awl (to align holes)**

HARDWARE LIST...

Key No.	Part No.	Part Description	Qty.	✓ List
1	65103	Hex Nut (#8-32)	74	
2	65923	Bolt (#8-32 x 3/8) (10 mm)	71	
3	65958	Long Bolt (#8-32 x 7/8) (22 mm)	1	
4	65004	Screw (#8AB x 5/16) (8 mm)	68	
5	65900A	Black Screw (#10B x 1/2) (13 mm)	8	
6	66646	Washer Sheet	3	
7	6481	Gusset	2	
8	66045	Door Handle	2	
9	66769	Door Slide	4	
10	66382	Door Guide	4	
11	66609	Hinge	3	
12	10670	Lid Latch Bracket	1	
13	7022	Eave Bracket	1	
14	10672	Door Latch Finger	1	
15	66776	Foam Tape	1	
16	65109	Acorn Nut	2	

Confirm that all hardware and parts are present before attempting to assemble your Storage Unit.

For missing parts, include the model number of your building and contact the retailer where you purchased your Storage Unit.

Part Numbers

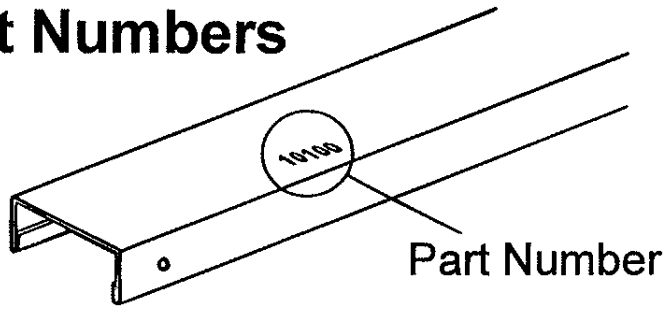

1. Each part has an identifying part number on it.
2. Part Numbers are referenced in each step.
3. Unpainted parts have a stamped in number and painted parts have a number that is inked on.

Remove inked on numbers with soap and water after assembly.

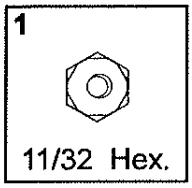

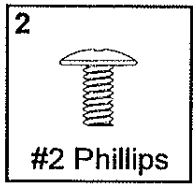

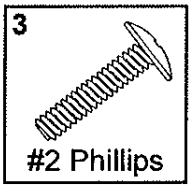

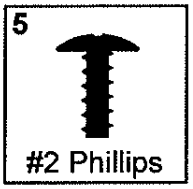

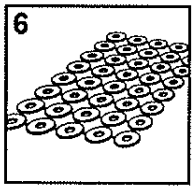

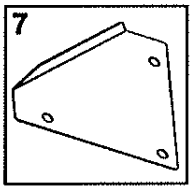

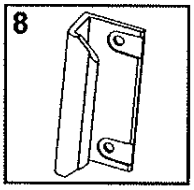

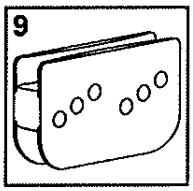

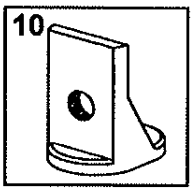

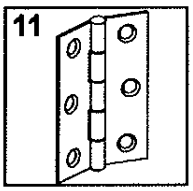

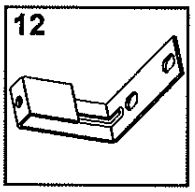

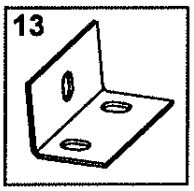

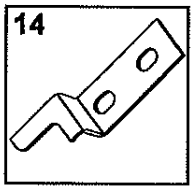

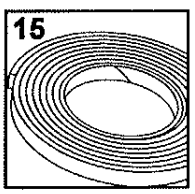

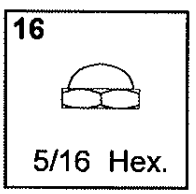

PARTS LIST...

Key No.	Part No.	Part Description	Qty.	✓ List
1	10499	Horizontal Door Brace	4	
2	9747	Rear Wall Panel	2	
3	9748	Rear Corner Panel	2	
4	9749	Front Corner Panel	2	
5	10674	Right Lid Panel	1	
6	9751	Lid End Panel	2	
7	9752	Rear Floor Frame	1	
8	9753	Side Floor Frame	2	
9	9754	Front Floor Frame	1	
10	9755	Door Track Angle	1	
11	9756	Door Track	1	
12	9757	Rear Wall Angle	1	
13	9758	Right Top Channel	1	
14	9759	Left Top Channel	1	
15	9760	Door Jamb	2	
16	10676	Right Door	1	
17	9763	Lid Front Channel	1	
18	9764	Lid Rear Channel	1	
19	9765	Lid Left Channel	1	
20	9766	Lid Right Channel	1	
21	9767	Lid Support Arm	1	
22	9768	Lid Diagonal Brace	2	
23	80047	Left Lid Panel	1	
24	80049	Left Door	1	

Selected End Views by Key No.

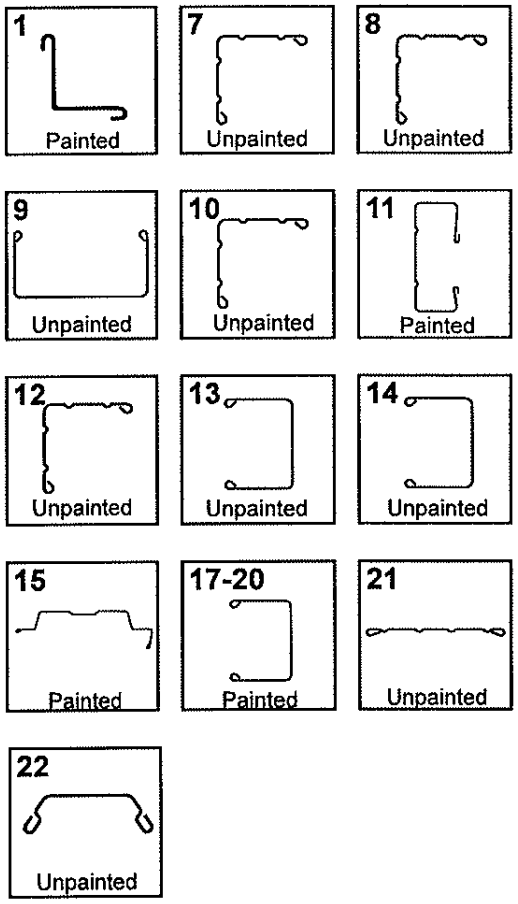

Some Tips for Assembly:

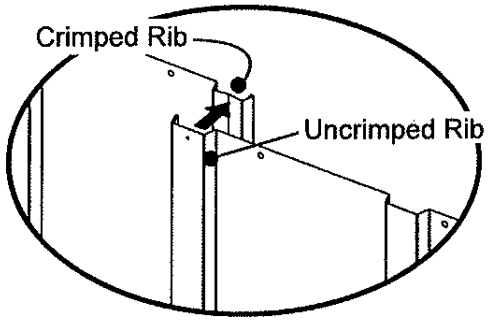

Whenever a crimped rib and an uncrimped rib meet, the crimped rib should be placed UNDER the uncrimped rib if possible.

ASSEMBLY BY KEY NO.

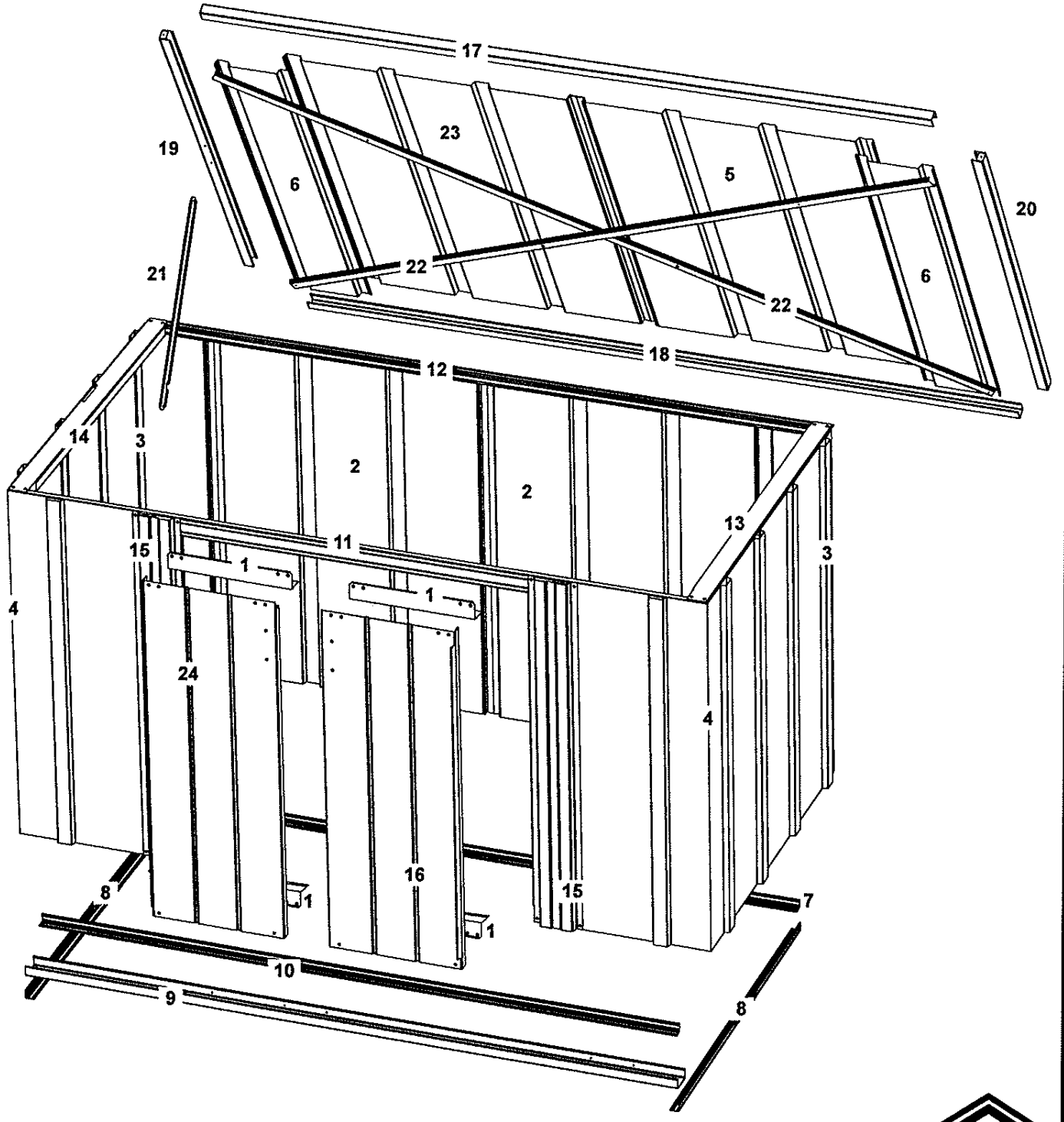

ARROW Storage Products

Step 1

You will need for this page:

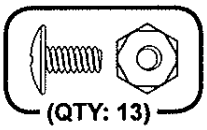

•	9755	Door Track Angle	(1)
•	9754	Front Floor Frame	(1)
•	9752	Rear Floor Frame	(1)
•	9753	Side Floor Frame	(2)
•	6481	Gusset	(2)

1 Use Bolts and Nuts to attach the Lower Door Track Angle to the Front Floor Frame as shown.

Double check that the end view of the assembled frame looks like the image to the right.

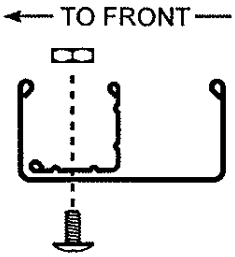

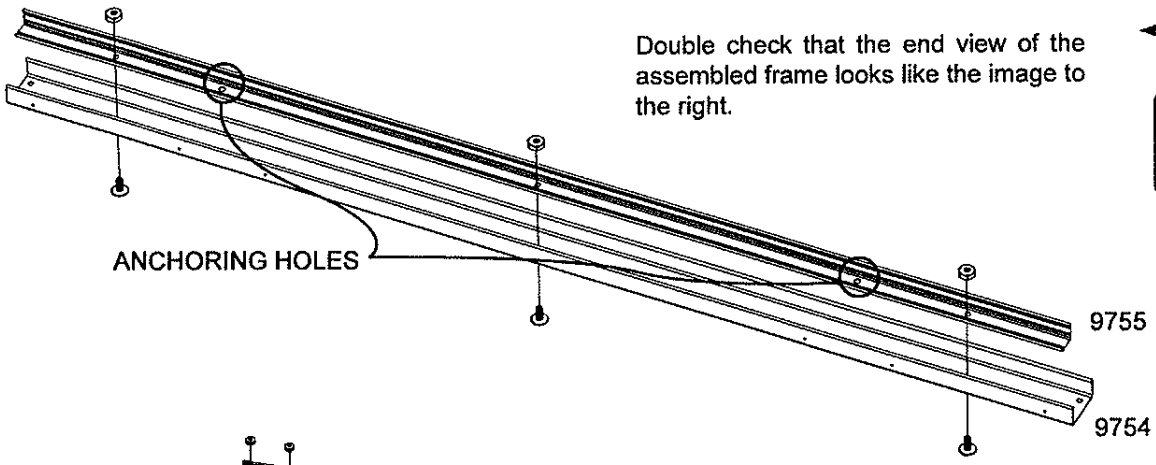

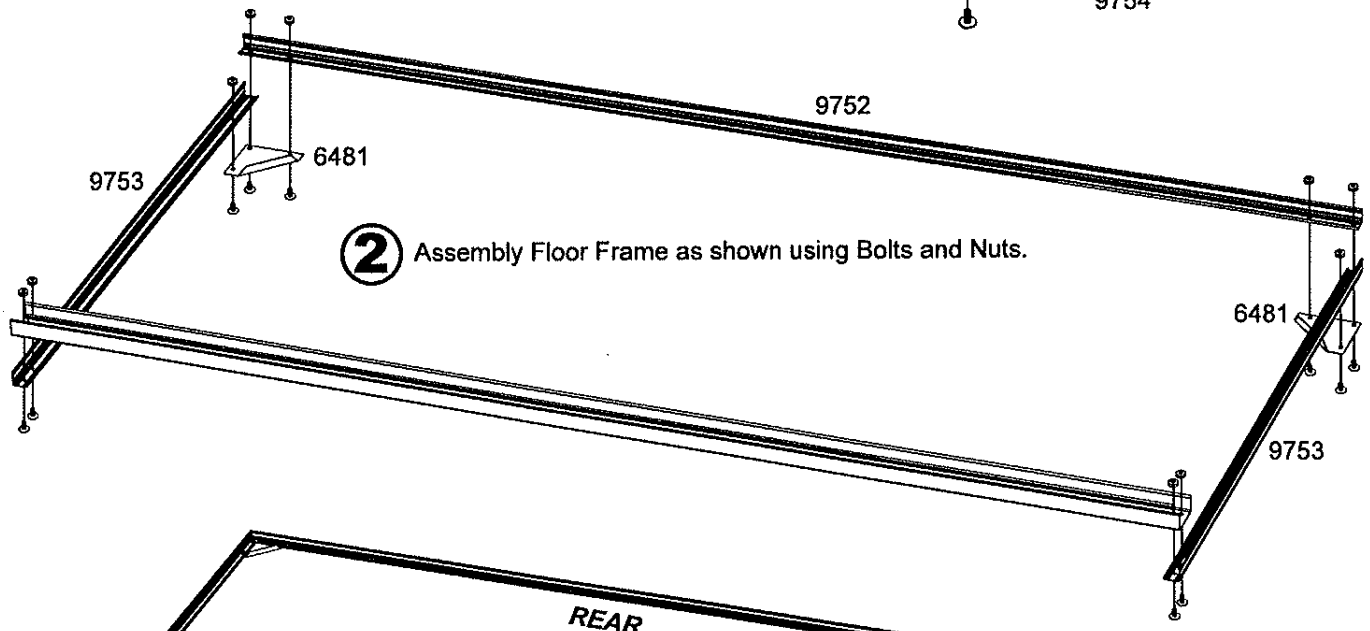

2 Assembly Floor Frame as shown using Bolts and Nuts.

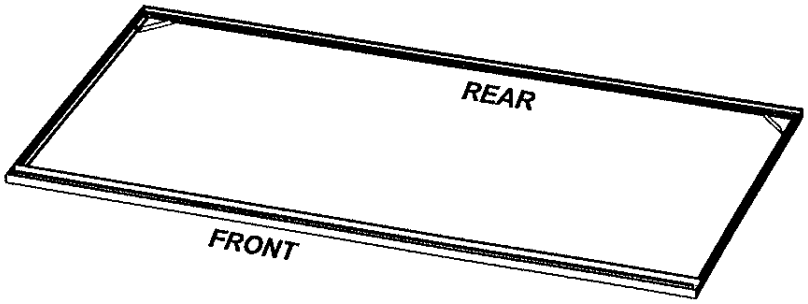

You will need for this page:

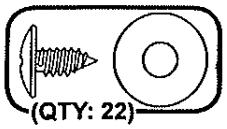

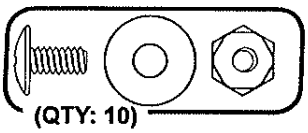

- 9747 Rear Wall Panel (2)
- 9748 Rear Corner Panel (2)
- 9749 Front Corner Panel (2)

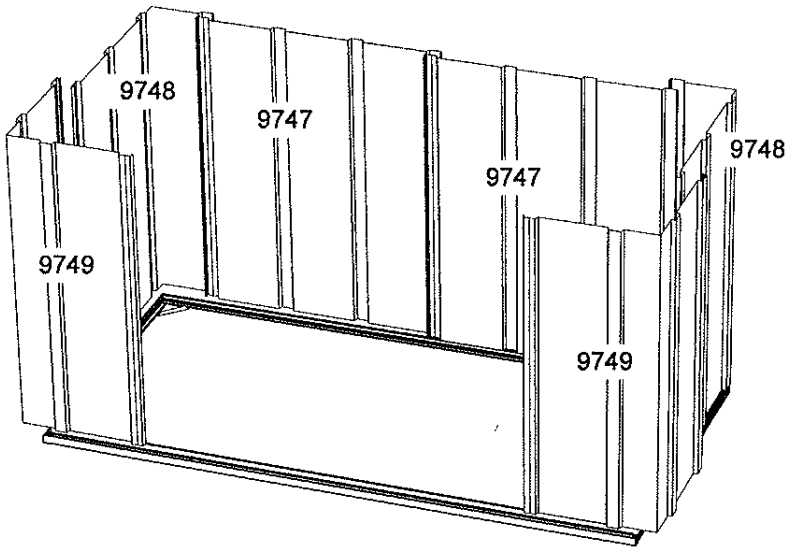

NOTE Place Washers on all Bolts and Screws used on painted parts.

Panels overlap as shown to the left. Start at one corner and work around the building when attaching Panels.

3 Position Panels as shown and secure to the Floor Frame with Screws. Fasten Screws thru all holes in the bottom of the Panels except at Rib Overlaps and the holes closest to the Door opening. Use a Bolt and Nut to fasten Panels together at Rib Overlaps as shown.

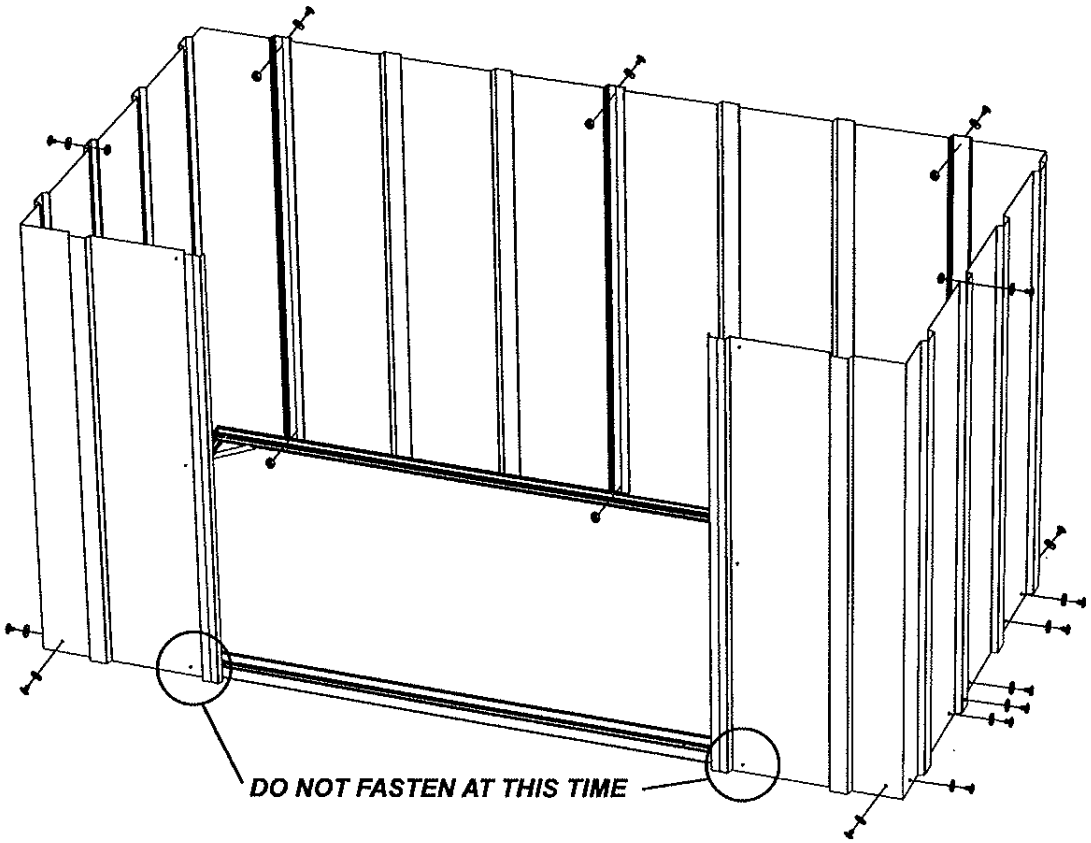

ARROW Storage Products

Step 2

You will need for this page:

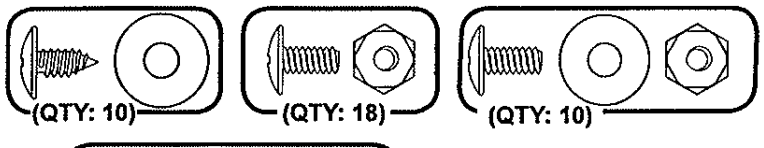

•	9757	Rear Wall Angle	(1)
•	9764	Lid Rear Channel	(1)
•	66609	Hinge	(3)
•	9756	Door Track	(1)
•	66769	Door Slide	(4)
•	9760	Door Jamb	(2)

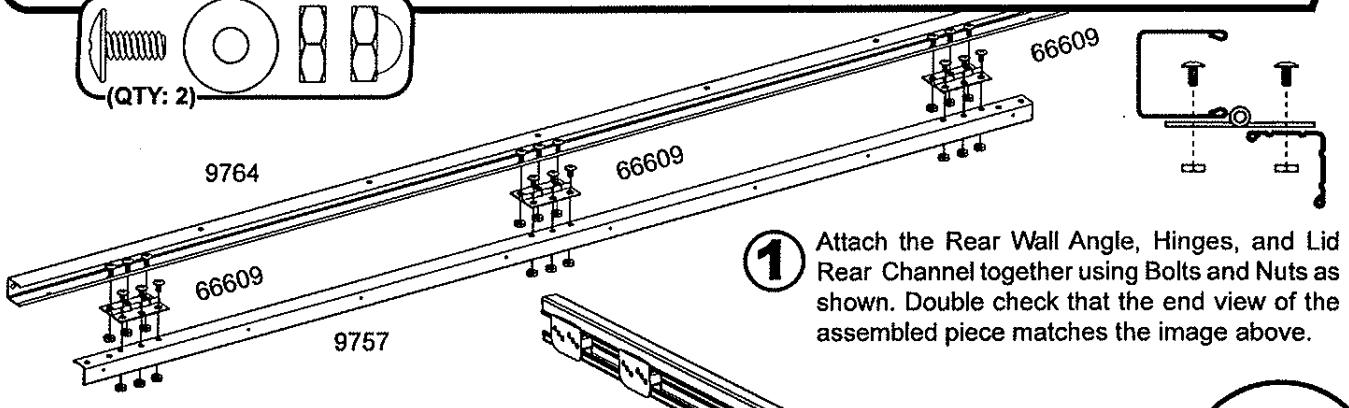

1 Attach the Rear Wall Angle, Hinges, and Lid Rear Channel together using Bolts and Nuts as shown. Double check that the end view of the assembled piece matches the image above.

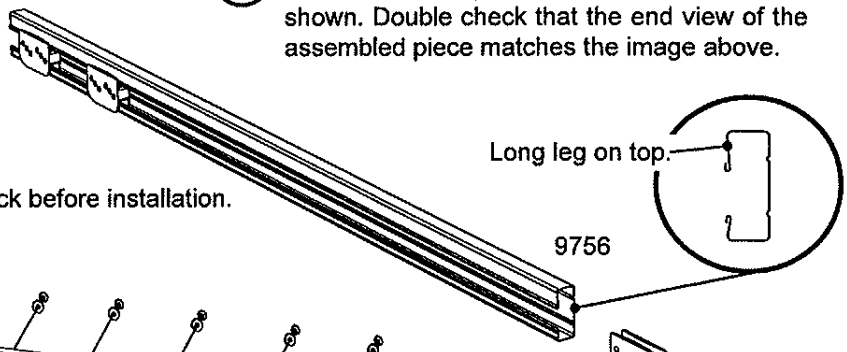

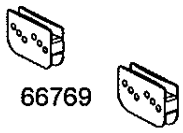

2 Slide ALL Door Slides into the Door Track before installation.

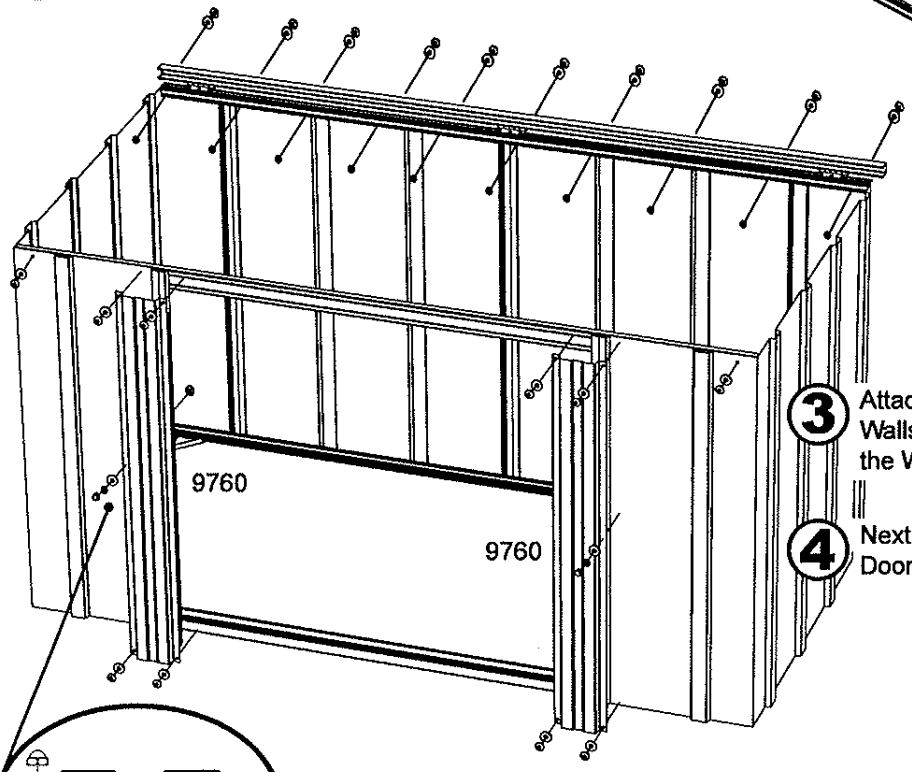

3 Attach the Rear Wall Angle Assembly to the Walls with Bolts and Nuts and Door Track to the Walls with Screws as shown.

4 Next, attach the Door Jambs to the Walls and Door Track as shown.

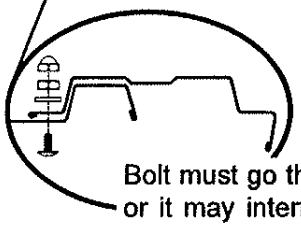

Bolt must go thru back side of Panel or it may interfere with Door action.

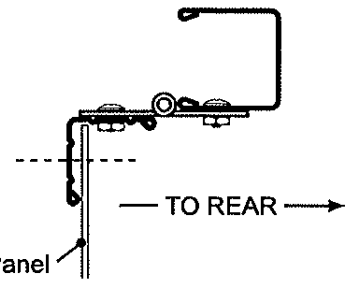

You will need for this page:

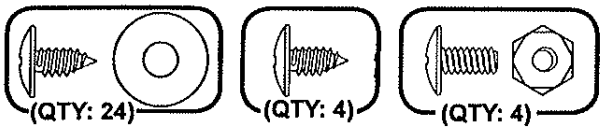

•	9758	Right Top Channel	(1)
•	9759	Left Top Channel	(1)
•	10674	Right Lid Panel	(1)
•	80047	Left Lid Panel	(1)
•	9751	Lid End Panel	(2)
•	9763	Lid Front Channel	(1)

5 Position the Left and Right Top Channels as shown and secure to Walls with Screws.

6 Next, secure the Left and Right Top Channels to the Front and Rear of the building with Screws in Front and Bolts and Nuts in Rear as shown.

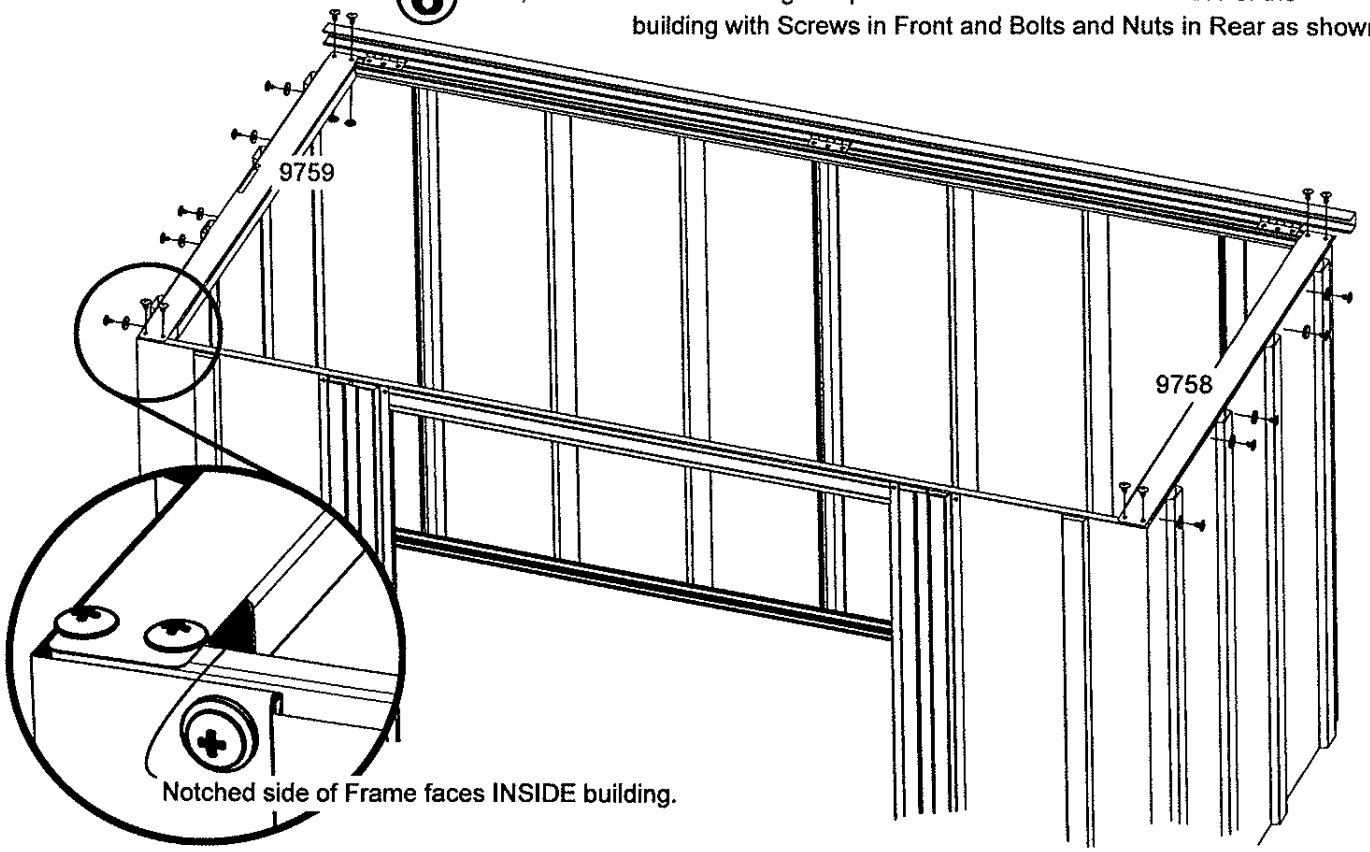

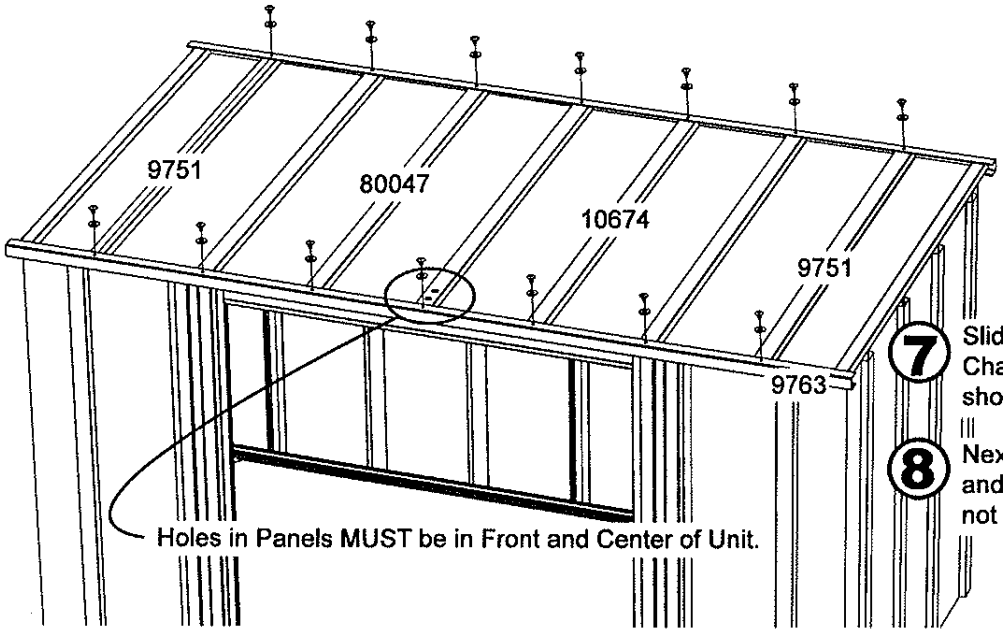

7 Slide ALL Lid Panels into the Lid Rear Channel and secure with Screws as shown. Do not fully tighten.

8 Next, position the Lid Front Channel and secure with Screws as shown. Do not fully tighten at this time.

ARROW Storage Products

Step 3

You will need for this page:

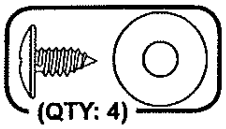

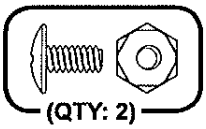

- 9765 Lid Left Channel (1)
- 9766 Lid Right Channel (1)
- 7022 Eave Bracket (1)

1 Attach the Eave Bracket to the Lid Left Channel with Bolts and Nuts as shown.

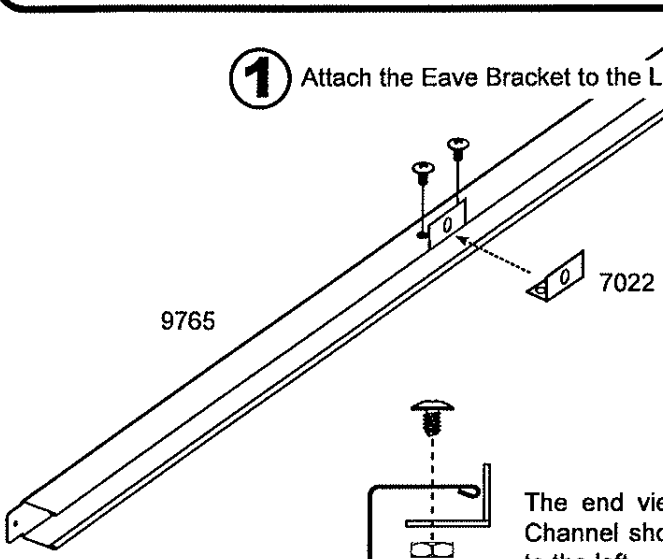

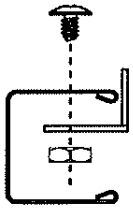

The end view of the assembled Channel should match the image to the left.

2 Bend the tabs on both ends of the Lid Left and Right Channels as shown.

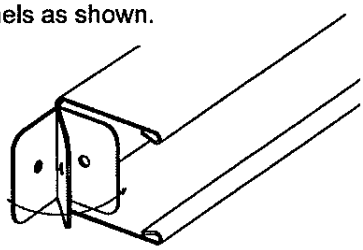

3 Slide the Lid Left and Right Channels into place as shown below. Fasten to Lid Front and Rear Channels with Screws. Parts should overlap as shown to the right.

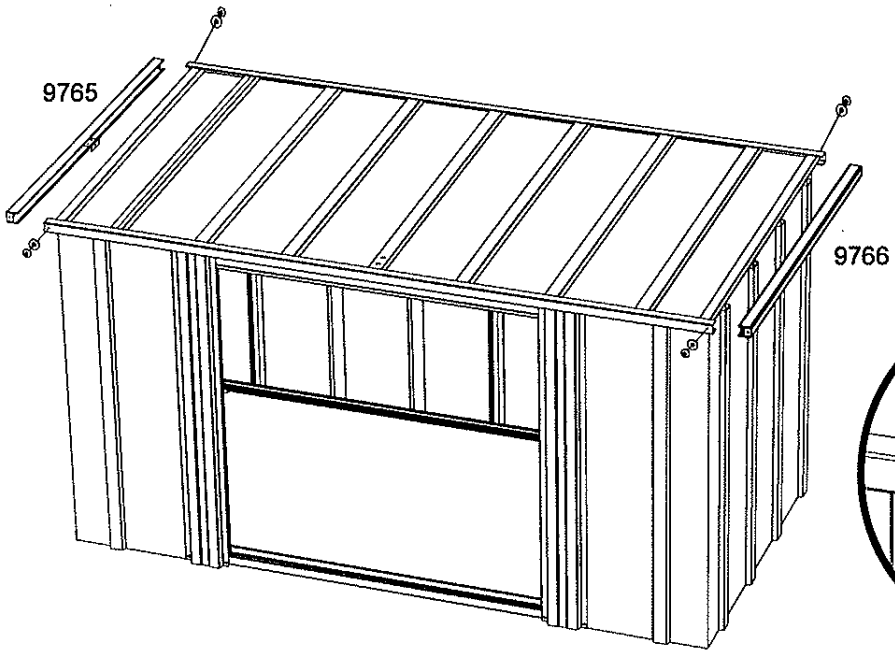

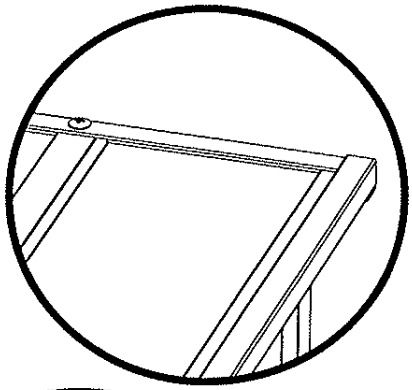

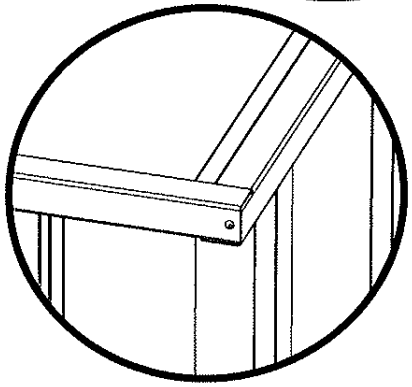

You will need for this page:

- 9768 Lid Diagonal Brace (2)
- 9767 Lid Support Arm (1)

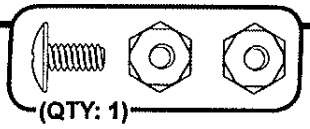

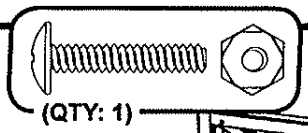

NOTE When inserting the Long Bolt in the Diagonal Braces, first locate the Nut against the back side of the hole with your finger and thread the Bolt into the Nut. This will make the process easier.

4 Working with one Brace at a time, attach each Diagonal Brace to the bottom of the Lid at the ends and then rotate to align with the top of the Lid. With both Braces in place, secure the Braces in the middle with a Long Bolt and Nut as shown. Fully tighten all Screws and Bolts, including Screws from previous step.

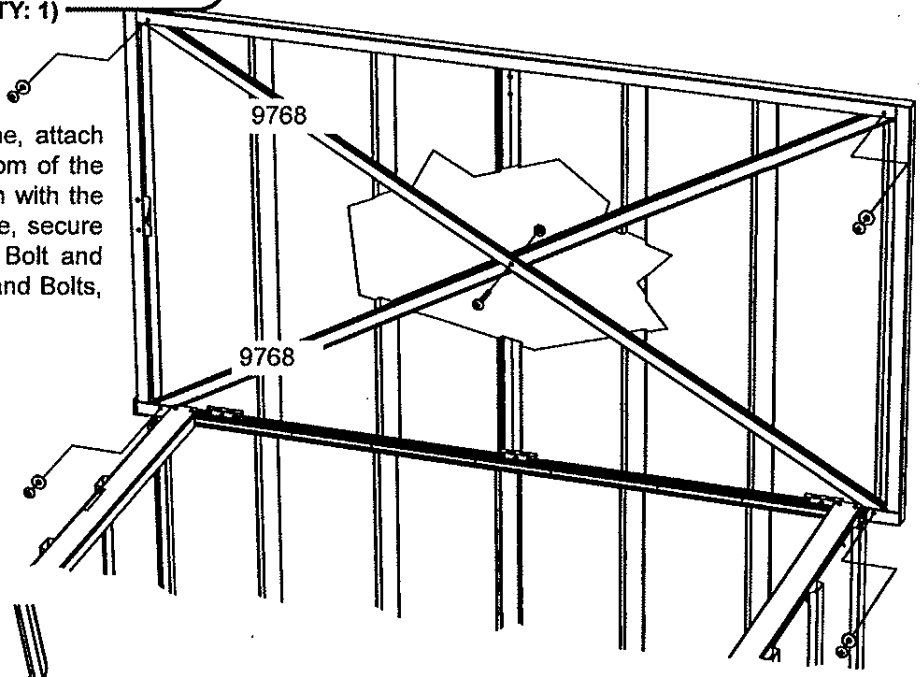

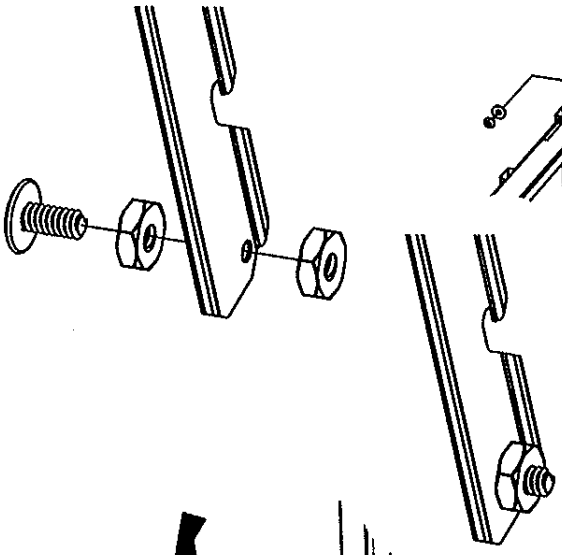

5 Place a Bolt thru the bottom of the Lid Support Arm as shown. There should be a Nut on BOTH sides of the Support Arm as indicated.

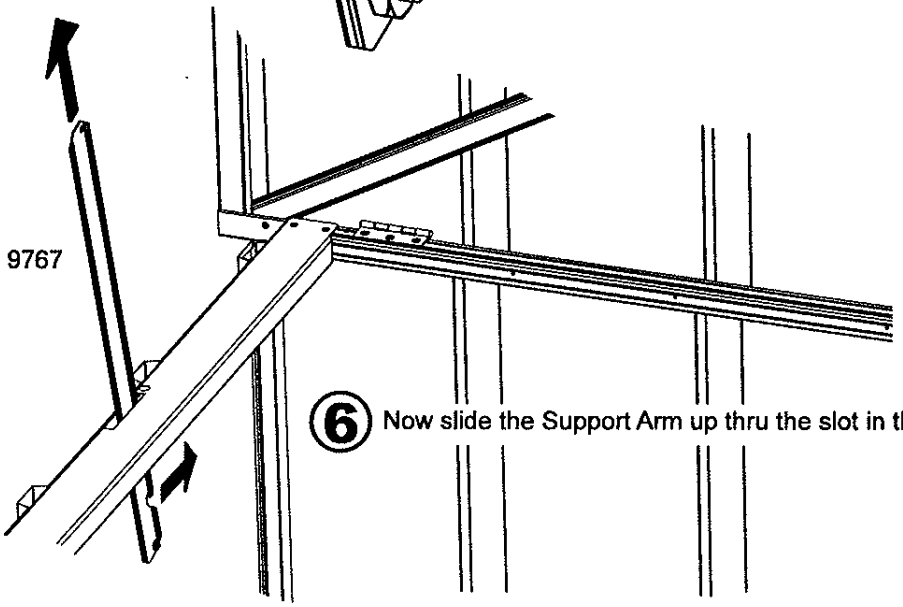

6 Now slide the Support Arm up thru the slot in the Left Top Channel as shown.

Notch in Lid Support Arm MUST face rear of Unit.

ARROW Storage Products

Step 4

You will need for this page:

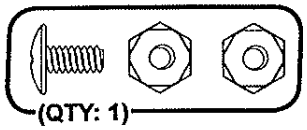

- 66776 Foam Tape (1)

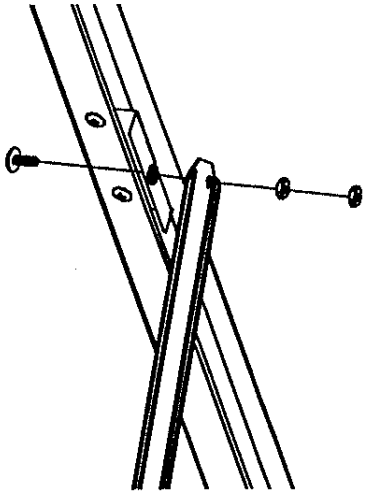

1 Next, rotate the Lid Support Arm into place and attach to the Eave Bracket with a Bolt and two Nuts as shown. Tighten the second Nut against the first. The second Nut will act as a 'Jam Nut' keeping the first Nut in place.

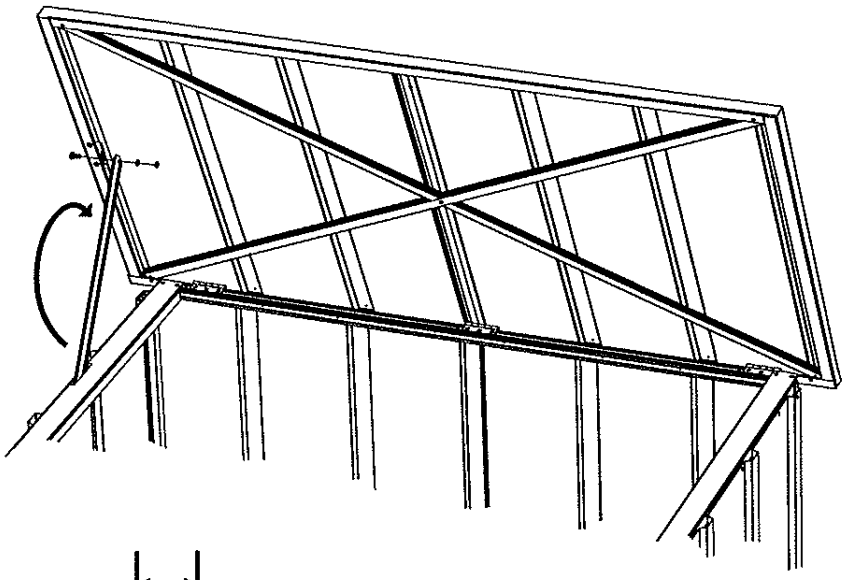

2 With the Lid assembled, apply the foam weather stripping tape to the outer edge of the Unit as shown. There should be no gaps in the tape except where the Lid Support Arm Slot is located. Press firmly as you apply to ensure good adhesion.

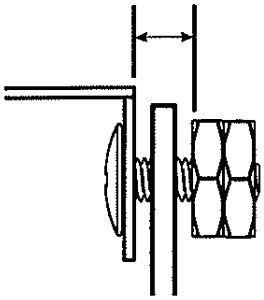

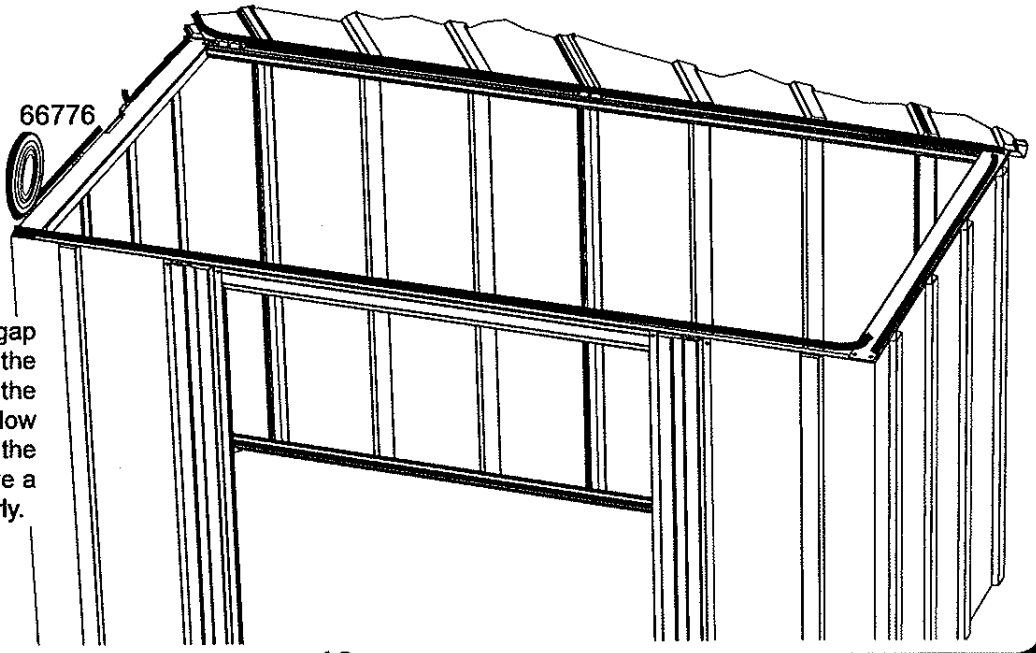

NOTE Be sure to leave a gap as indicated in the image above when installing the Lid Support Arm. This gap will allow the Lid Support Arm to pivot as the Lid is closed. If you do not leave a gap the Lid may close improperly.

You will need for this page:

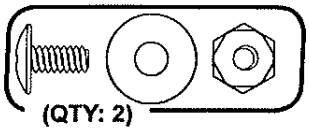

- 10670 Lid Latch Bracket (1)

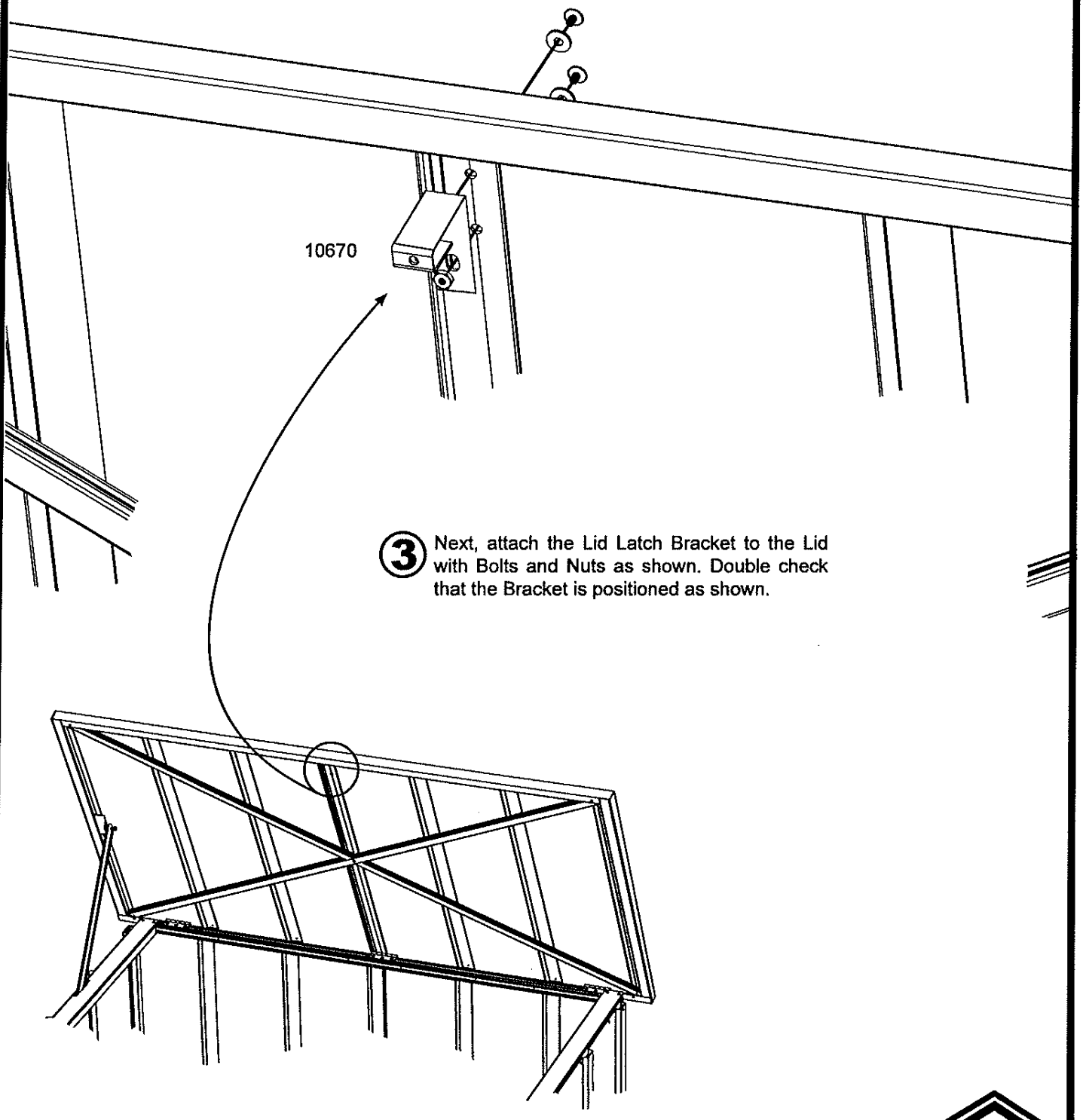

3 Next, attach the Lid Latch Bracket to the Lid with Bolts and Nuts as shown. Double check that the Bracket is positioned as shown.

ARROW Storage Products

Step 5

You will need for this page:

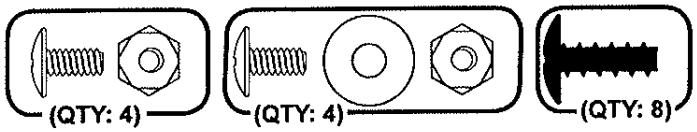

•	10676	Right Door	(1)
•	80049	Left Door	(1)
•	10499	Horizontal Door Brace	(4)
•	10672	Door Latch Finger	(1)
•	66045	Door Handle	(2)
•	66382	Door Guide	(4)

Do NOT place hardware thru the top row of holes yet. These lines are to show alignment only.

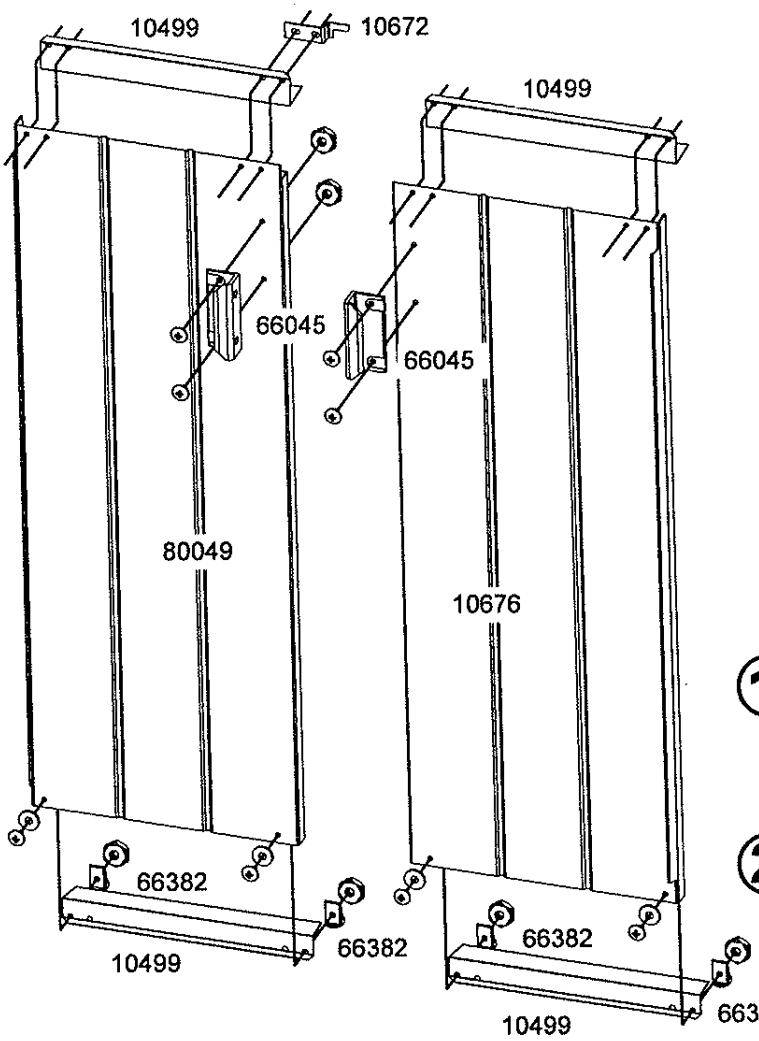

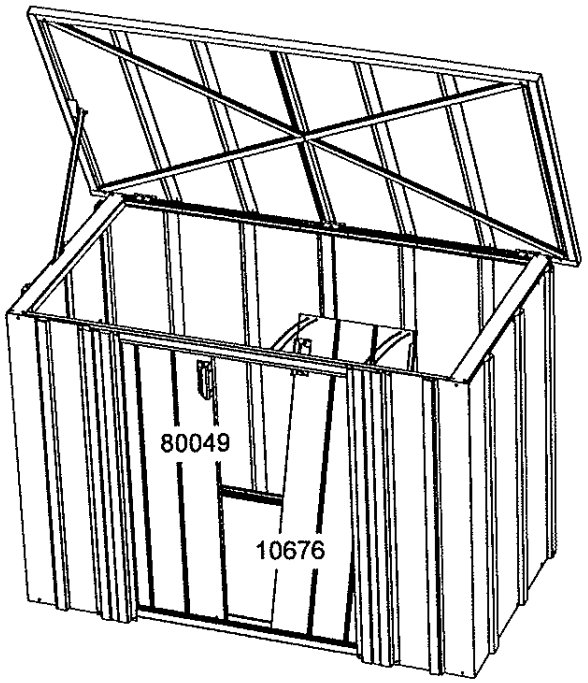

1 Attach the Door Handles to the Left and Right Doors with Bolts and Nuts as shown. Attach the Door Guides and the Horizontal Door Braces to the BOTTOM side of the Left and Right Doors using Bolts and Nuts as shown.

2 Next, place one Door in the Front Bottom Frame and rotate it into place as shown above. Position the Horizontal Door Brace (and Door Latch Finger for the Left Door) as shown (see next page) and secure to Door Slides with Black Screws.

Repeat for other Door.

NOTE Each Door Slide has three sets of holes. Install Doors by placing the Black Screws thru the middle holes first. If Doors do not align, raise or lower the Doors by moving the Screws to a different set of holes.

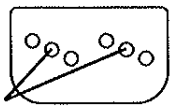

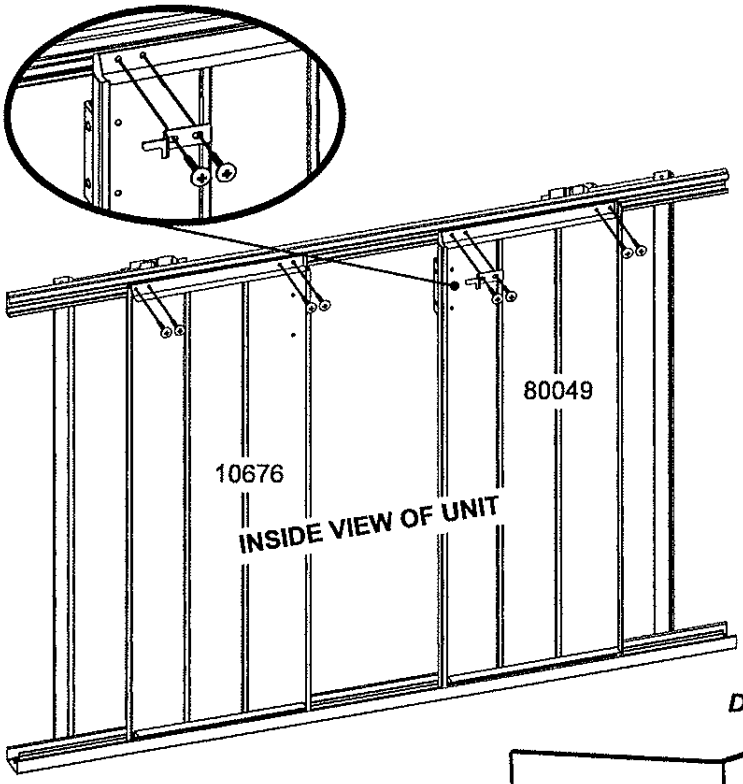

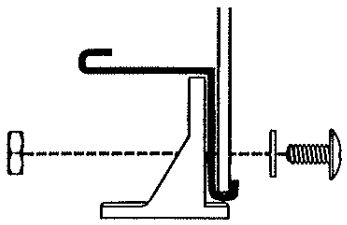

The Lower Door Guide should be positioned on the Door as shown above.

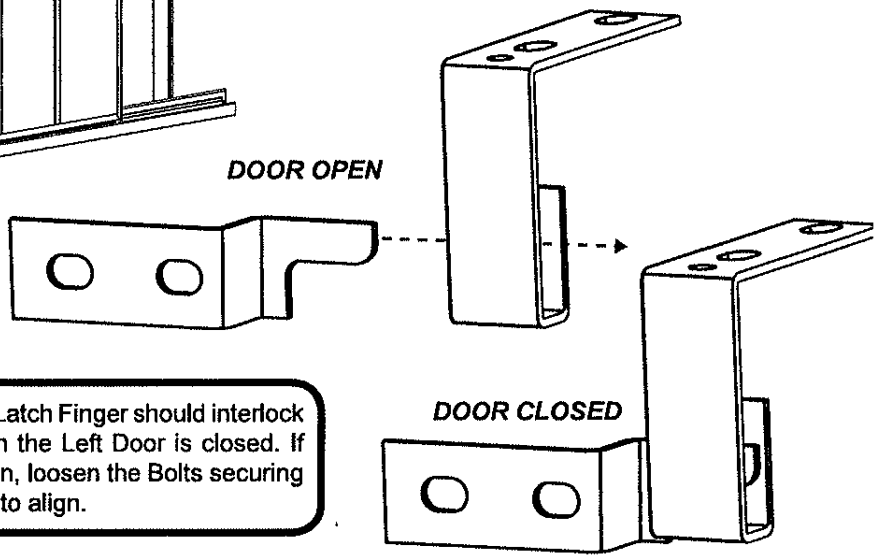

NOTE The Latch and Latch Finger should interlock as shown when the Left Door is closed. If they do not align, loosen the Bolts securing them and slide to align.

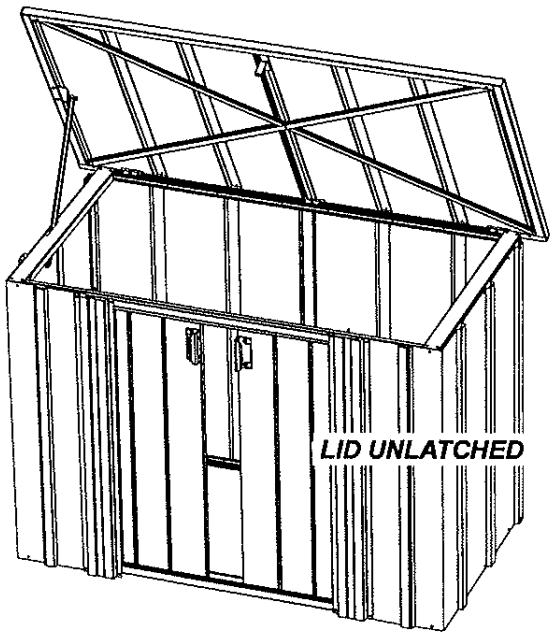

With the Lid Latch in place, CLOSING the Doors will LATCH the Lid and OPENING the Doors will UNLATCH the Lid.

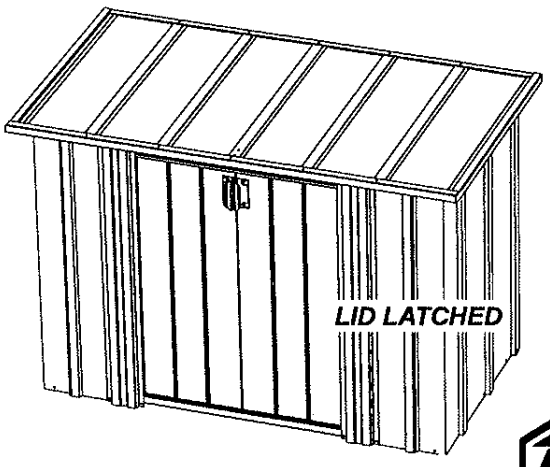

ARROW Storage Products

Exterior Care:

For a long lasting finish clean and wax the exterior surface. We recommend washing with a mild soap solution. DO NOT use power washing to clean your Storage Unit. Using a spray automotive type wax periodically on the exterior is highly recommended if you are in a high humidity or coastal climate region.

Combustibles and corrosives must be stored in air tight containers designed for chemical and/or combustible storage. Corrosive chemicals such as fertilizers, pesticides and herbicides should be cleaned off the interior and exterior surfaces immediately. Rust caused by chemical damage is not covered by the warranty.

DO NOT STORE POOL CHEMICALS IN YOUR STORAGE UNIT - THIS VOIDS YOUR WARRANTY

Rust protection precautions may help to stop rust from developing, or stop it quickly as soon as it appears.

• Avoid nicking or scraping the coating surface, inside and out.

• Use washers everywhere indicated in this manual to help prevent corrosion.

• Keep lid, base perimeter and door tracks free of debris and leaves which may accumulate and retain moisture. These can do double damage since they give off acid as they decay. Lubricate door track as needed.

• Touch up scrapes or nicks and any area of visible rust as soon as possible. Make sure the surface is free of moisture, oils, dirt or grime and then apply an even film of high quality touch-up paint.

• Various paint manufacturers provide products for rust treatment and coverage. If surface rust does appear on your Storage Unit we recommend treating those areas as soon as possible, following the paint supplier of your choice instructions.

Please note, Manufacturer cannot be held responsible for any consequences due to buildings that are not installed per these instructions, or for damage due to weather conditions or acts of God.

Anchoring Your Storage Unit

The entire floor frame MUST be securely anchored once the building is erected.
Here are recommended ways of anchoring.

Anchoring into Wood/Post:

Use 1/4" (6 mm) Wood Screws. There are 1/4" (6 mm) dia. holes provided in the frames for proper anchoring.

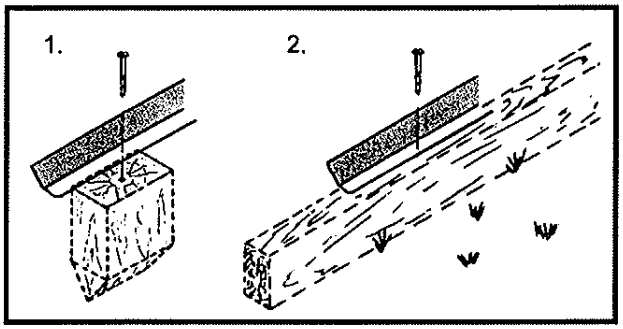

Anchoring into Concrete:

1. For poured concrete slab or footing or patio blocks: Use 1/4" x 2" (6 mm x 51 mm) Lag Screws.
2. For Anchor Post of Concrete poured after building is erected: Use 1/4" x 6" (6 mm x 152 mm) Lag Screws.

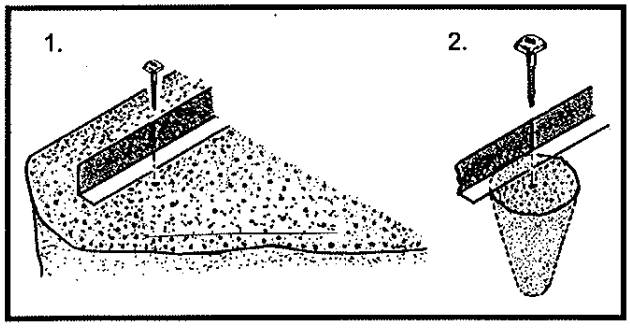

Keep these assembly instructions and owner's manual for future reference.